Principles of Cyber Security

Kostas Papadopoulos

Security Concepts **5**
Definition 5
C.I.A. 5
Confidentiality 5
Tools 5
Integrity 5
Tools 5
Availability 6
Tools 6
A.A.A 6
Assurance 6
Authenticity 6
Anonymity 6
Threats and Attacks 7
Ten Security Principles 7

Cyber Actors **8**
Cybercriminals 8
Nation States 8
Hacktivists 8
Insiders 8
Script Kiddies/ Noobs 9

Cyber Attack Life Cycle **9**
Lockheed Martin's Kill Chain Model 9
Simple Kill chain model 9
Kill Chain with Lateral movement 10

Cyber Attacks (part 1) **10**
Money Theft 10
Examples 10
Personal Document Ransom 11
Examples 11
Data Breaches 12
Examples 12

Cyber Attacks (part 2) **12**
DDoS 12
Examples 12
Influence Campaigns 13

Examples 13
Web defacements 13
Examples 13

Corporate Security 13
Cyber Essentials 13
Firewalls 14
Secure Configuration 14
User Access Control 14
Malware Protection 15
Patch Management 15
Advanced Cyber Defenses 16
Data Protection 16
Segregation of Duties 16
Network fragmentation and monitoring 16
Honeypots 16
Pentesting 16
Standards 16

APTs 17
Definition 17
Goals 17
Post Exploitation 17

Social Engineering 18
Definition 18
Techniques 18
Information Gathering 18
Interaction with the Target 19
Tailgating 19
Baiting 19
Mitigations 19

Cyber Warfare and Hacktivism 20
Cyber Warfare 20
Definition 20
Example 20
Cyberwar vs Conventional War 20
Weapons 21
Advantages of cyberwar 21
Hacktivism 21
Hacker ethics 22
Hacker Culture 22
Hacktivism vs Cyberterrorism 22
Hacktivist Groups 22

Anonymous 22
Wikileaks 22

Security of Critical Infrastructures 23
Introduction 23
Security 24

Cryptography 25
Types of encryption 25
Digital Signature 25
Diffie-Hellman key exchange protocol 26
Color example 27
Example from slides 28
Digital certificates 29
PKI Key players 30
Network Authentication 31
Kerberos 31
Disadvantages of Kerberos 31
SSL/TSL 32
HeartBleeed 32

Privacy and Data Anonymization 32
Privacy 32
Privacy as Confidentiality 33
Privacy as Control 33
Privacy as Practice 33
Data Anonymization 34
Attributes classification 34
Techniques 34
k-anonymization 34
l-diversity 34
t-closeness 35
differential privacy 35

User Authentication Part 1 35
Password based authentication 36
Token based authentication 37
Barcodes 37
One Time Password devices 38
Magnetic Stripe Cards 38
Smart cards 38
Electronic Passports 38
Biometrics based authentication 38
Multi-factor authentication 39

User Authentication Part 2 39

Digital Identity 39
Single Sign On 40
SAML 40
Shibboleth 42
OpenID Connect 42
OAuth (more about this later) 42

Access Control Part 1 43
AAA Systems 43
Access Control Models 43
DAC 43
Access Matrix 44
Access Control List 44
Access Capability List 44
Limitations of DAC 44
RBAC 45

Access Control Part 2 46
XACML 46
Actors & Grant flow 47
Key Components 47
<PolicySet> 47
<Rule> 48
<Target> 48
<Policy> 48
<Request> 49
<Response> 49

Access Control Part 3 49
OAuth 49
Authorization code grant flow 50
Resource owner password grant flow 50
Client credential grant flow 50

Blockchain part 1 50
Introduction 50
Transactions 51
Double spending 52
Decentralization 52
Proof of Work 53
Performance 54

Blockchain part 2 54
Smart Contracts 54
Ethereum 54
Decentralized Applications 55

Permissioned Blockchain 56
HyperLedger Fabric 57

Security Concepts

Definition

The security of a system is always relative to:
1. A set of desired properties
2. An adversary with specific capabilities

There are many security concepts, the most popular of which are C.I.A and A.A.A

C.I.A.

Stands for **Confidentiality - Integrity - Availability**. Describes the main goals of security.

Confidentiality

Avoidance of unauthorized disclosure of information.

Tools

1. **Encryption** → Transformation of information, using a secret, aka encryption key, so that the transformed content can only be read by using a secret, aka decrypted key (sometimes encryption key = decryption key)
2. **Access Control** → Rules and Policies that limit access to confidential information to people or systems with a need to know. This can be determined by identity or by the role of a person.
3. **Authentication** → Determination of the identity or the role of a person, based on different characteristics: who the person *is* (fingerprint), what the person *knows* (password), what the person *has* (smartcard).
4. **Authorization** → Determination if a person is allowed to access some resources, based on its access control policy
5. **Physical Security** → Establishment of physical barriers to limit access to protected computational resources (e.g. locks, windowless rooms, Faraday cages)

Integrity

Information *has not been altered* in an unauthorized way.

Tools

1. **Backups** → periodic archiving of data
2. **Checksums** → computation of a function that maps contents of a file to a numeric value. Even a small change can provide different output

3. **Data correcting codes** → storing data in such a way that small changes can easily be detected and corrected automatically

Availability

Information is *accessible* and *modifiable* by those authorized to do so in a *timely* fashion

Tools

1. **Physical Protection** → infrastructure that keeps information available during physical challenges
2. **Computational Redundancies** → computers as fallbacks in case of failures

A.A.A

Assurance

How *Trust* is provided and managed in computer systems
Trust Management depends on:

1. **Policies** → behavioural expectations that people/systems have. (e.g. policies about accessing songs)
2. **Permissions** → behaviours allowed by the agents interacting with a person/system (e.g. permission for limited access to songs from customers)
3. **Protections** → mechanisms to enforce policies and permissions

Authenticity

The ability to determine whether policies and permissions are genuine.
The primary tool for that are **digital signatures,** which are cryptographic computations, that allow a person to verify the authenticity of their documents, in a way that achieves **nonrepudiation** (authentic statements cannot be denied)

Anonymity

Certain transactions cannot be attributable to any individual

Tools

1. **Aggregation** → combining the data from many people, so that sums cannot be attributed to a particular individual
2. **Mixing** → intertwining of transactions or communication in a way that they cannot be traced back to any individual
3. **Proxies** → trusted agents willing to engage in actions for an individual in a way that they cannot be traced back to that person
4. **Pseudonyms** → fictional identities that can fill in for real ones, but are known only to a trusted entity.

Threats and Attacks

1. **Eavesdropping** → interception of information transmitted through a communication channel
2. **Alteration** → unauthorized modification of information (man in the middle)
3. **Denial of Service** → interruption or degradation of data service/information access
4. **Masquerading** → fubrication of information purported to be from someone who is not the actual author
5. **Repudiation** → denial of a commitment of data receipt
6. **Correlation and Traceback** → multiple data sources to determine the source of a specific data stream

Ten Security Principles

Cyber Actors

Cybercriminals

a. illegal profit
b. typical attacks
    i. money theft
    ii. personal document ransom
    iii. data breaches
    iv. Distributed Denial of Service DDoS
c. attack vectors
    i. malware
    ii. email
    iii. botnet

Nation States

d. intelligence, sabotage activities, subversion e.g. political election
e. typical attacks
    i. influence campaigns
    ii. data breaches
    iii. DDoS
f. attack vectors
    i. same as cyber criminals, but more advanced
    ii. social media

Hacktivists

g. political, religious, social ideologies
h. typical attacks
    i. web defacements
    ii. leakage of confidential information (e.g. wikileaks)
    iii. data breaches
    iv. DDoS
i. attack vendors
    i. malware
    ii. email
    iii. botnet

Insiders

j. Intentional Attacks →publish information on the web, install logic bomb, steal and sell information (e.g. by disgruntled employees)
k. Unintentional Attacks → accidentally delete/post confidential information, visit websites with malcode, infecting the enterprise network

Script Kiddies/ Noobs

l. desire to join real hacker groups, challenge and curiosity
m. less skilled hackers with *no strategy, no methodology,* that use *internet tools*

Cyber Attack Life Cycle

There are many models for describing the lifecycle of an attack. They are important because:

1. they help us analyse methods used in past attacks
2. they inform us about how past attacks succeeded, forming a structured knowledge base
3. efficient way to protect assets against future attacks

Lockheed Martin's Kill Chain Model

Simple Kill chain model

The following model is mainly constructed for complex cyber intrusion, like APT attacks; therefore some phases might not be present for simpler attacks.

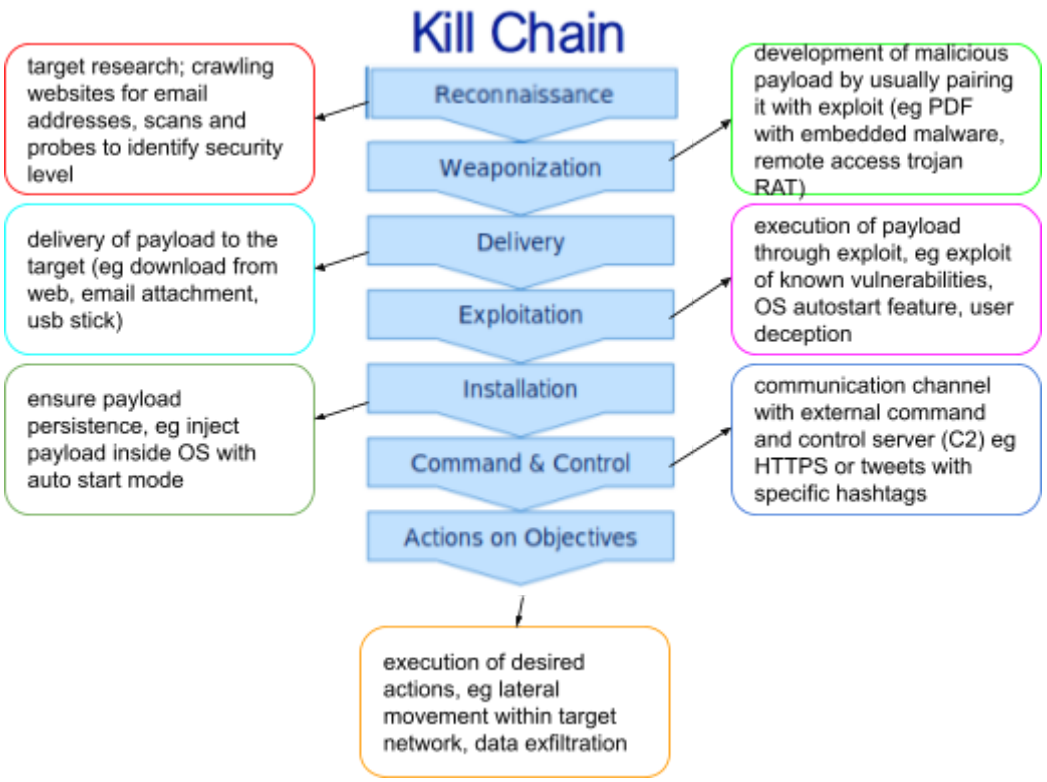

Kill Chain with Lateral movement

If an attack is a multi step attack, like the Equifax example from the slides, then the Kill chain model with include a lateral movement step, like below

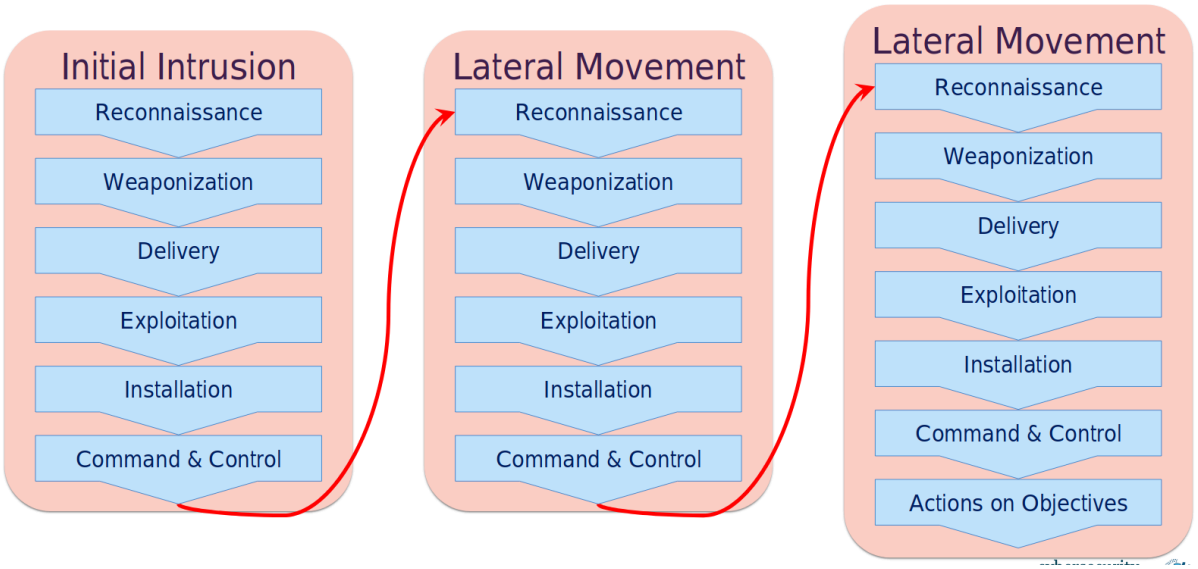

Cyber Attacks (part 1)

Money Theft

Depends on the target it can steal:

1. end users → credit cards
2. enterprises → business email compromise scams
3. financial institutions → millions of money
4. cryptocurrency exchanges/wallet → cryptocurrencies

Examples

- Zeus
  One of the most popular banking trojan horse
  Target Windows OS
  Man-in-the-browser attack (keylogging)
  Active since 2007
  Zeus 2010 stole 70$ million, more than 100 people arrested, detected through partnership of UK, US Netherlands and Ukraine

  Lifecycle

  1. Creates registry key for persistence
  2. Create Dropped.exe

3. Execute batch file to 1) delete Dropped.exe and 2) launch Dropped.exe
4. Inject itself inside explorer.exe
5. Download configuration from C&C
6. POST data to C&C

- Business Email Compromise (BEC)
  Emerging form of scam with little technical expertise needed.
  Request large money transfer pretending to be CEO through spoofed and cleverly crafted emails.
  Hijacking legitimate invoice to change account number to scammer's.

- Bangladesh Bank Heist
  Hackers used SWIFT credentials to execute fraudulent transactions over the SWIFT network; requested 1 billion, got 101 million, 38 of them recovered. More specifically, the attackers did not compromise SWIFT, but used valid credentials, acquired either by insiders or by breaching bank's network. They used malware to stop the printer from printing SWIFT transactions.

- Cryptocurrency Wallets/Exchanges
  Given the recent cryptocurrency boom, and the fact that crypto exchanges managed many different assets, many exploited their vulnerabilities to steal money. (Coincheck)

Personal Document Ransom

Attacker sends email with subject referring to invoice or bill, with an attachment that is infected with malware, which

1. prompts users to execute macro
2. launches powershell and executes final payload

Then the ransomware encrypts files, which the only way that can be decrypted is by paying the ransom, usually in bitcoin. Usually decryptor is released by security firms after some time. Usually a message is shown to explain wtf just happened.

Examples

- WannaCry
  May 12 2017 - thousands computers infected in a matter of hours.
  Self-propagate and spread across local networks and internet
  EternalBlue exploit used to execute arbitrary code on a targeted computer
  200K computers infected in 150 countries
  National Health Care in the UK, Nissan and Renault sites halted production
  Hundreds of millions of economic losses

- Petya
  June 27 2017 - similar to WannaCry, but mostly focused in Ukraine
  Used trojanized version of MEDoc, tax and accounting software in Ukraine

Spread to IP addresses linked to infected systems
Steal credentials from Windows Credential Manager
Propagate either by EternalBlue or stolen credentials

- RansomWare as a Service (RaaS)
  Malware developers create ransomware kits to easily create and customize new ransomware variants, in exchange for a percent of the profits. *Shark* 2016 is distributed through a website, that gives a share of 20% automated to the Shark creators.

Data Breaches

Examples of Stolen Data → names, email addresses, date of birth, numbers, hashed passwords. According to reports, overall there have been 7.1 billion identities stolen (1 for each person in the planet!)

Examples

Yahoo! revealings:

- September 2016 → breach in 2014 led to 500 million being compromised
- December 2016 → breach in 2013 led to more than a billion compromised
- October 2017 → actually all its 3 billion accounts compromised

Cyber Attacks (part 2)

DDoS

Aims at making a service unavailable for the intended users by overloading its resources
This is commonly due to service request flooding
Distributed Denial of Service is when we have flooding traffic by many different sources

- Botnets
  Large groups of computers, networked together and combining their computing power to cause DDoS attacks. Built from vulnerable systems with no concern to whom they belong (eg IoT devices). Usually controlled by a C&C infrastructure
  IoT devices are preferred because:
  1. poor practices → default passwords and open ports that users cannot change
  2. no built-in mechanisms for automatic firmware update notifications
  3. owners are unaware of their use; forget security updates

Examples

- *Mirai* → botnet used for some of the most successful DDoS attacks, including the web host OVH and popular websites such as Netflix, Twitter and Paypal.
  Works by continuous scanning for vulnerable IoT devices over the internet and infects them with malware that forces them to report to a C&C.

Influence Campaigns

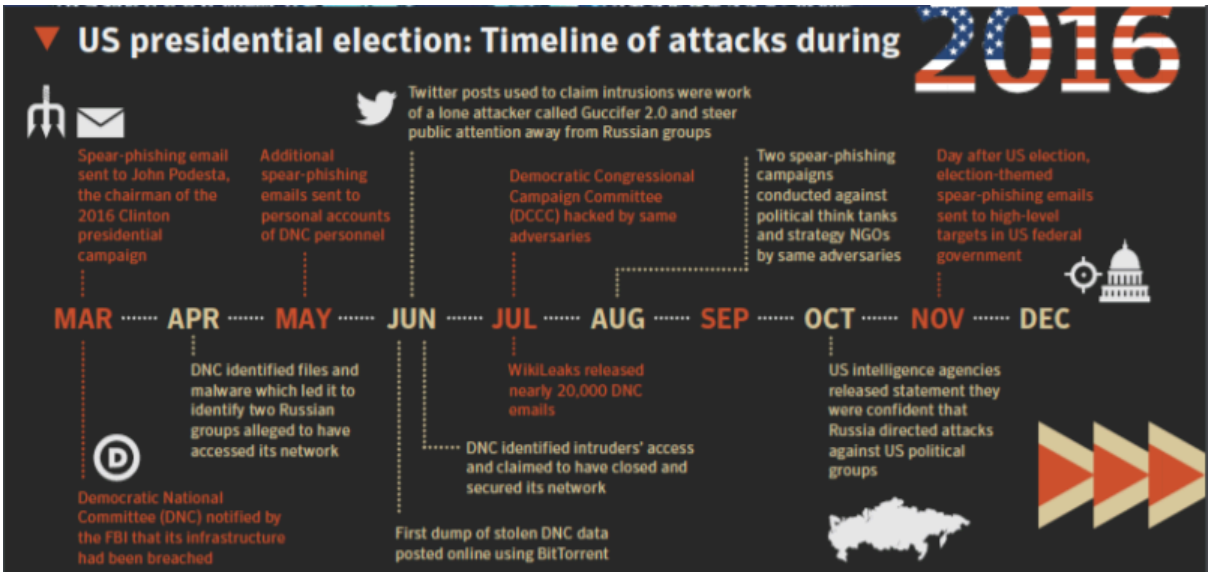

Examples

Spear phishing email sent to John Podesta, chairman of 2016 Clinton presidential election.

Web defacements

A kind of electronic vandalism whose main goal is to attract media attention. It is mostly done by hacktivists, that exploit known/unsophisticated vulnerabilities, choosing targets who are easy to attack.

Examples

The "*Netherlands Operation*", which started as a political quarrel between the Netherlands and Turkey. In March 11-12-2017 many websites were targeted, also by defacement.

Corporate Security

Cyber Essentials

Basic requirements for IT infrastructure

1. Firewalls
2. Secure configuration
3. User access control
4. Malware protection

5. Patch management

Firewalls

Ensure that only safe and necessary network services can be accessed from the Internet.

- Use firewalls to reduce exposure to attacks
    - Boundary firewalls
    - Host-based firewalls
- Firewall rules to block/allow traffic on the basis of
    - Source
    - Destination
    - Protocol

- Requirements
    - Block unauthenticated inbound connections
    - Every inbound rule that accepts connections must be motivated and documented
    - Administrative access
        - Change default password
        - Disable remote access
            - Entirely
            - From the Internet

Secure Configuration

Ensure that computers/devices are configured to reduce vulnerabilities and provide only strictly required services

- Default configurations are not always secure
    - Administrative account with known default password
    - Unnecessary user accounts
    - Unnecessary applications and services

- Requirements
    - Remove/disable unnecessary accounts and software
    - Change default/guessable passwords
    - Disable auto-run features
    - Authenticate users before allowing Internet-access to sensitive data

User Access Control

Ensure user accounts are assigned to authorised individuals only and provide access to actually required resources only.

- Helps reducing the risk of information being stolen or damaged
- Compromising accounts with special privileges can result in severe damage
    - Make significant and security relevant changes to the OS
    - Create/update/remove accounts and their privileges

- Requirements
    - Setup a process to create and approve a new user account
    - Always authenticate users before granting access to applications/devices
    - Remove/disable accounts when no longer required
    - Use two-factor authentication
    - Use administrative accounts to perform administrative activities only

Malware Protection

Restrict execution of known malware and untrusted software.

- Helps reducing the risk of harmful code causing damage
- Potential source of malware infection
    - Email attachments
    - Downloads
    - Direct installation of unauthorised software
- Problems deriving from malware infection
    - Malfunctioning
    - Data loss/leakage

- Requirements
    - Anti-malware software
        - Always up to date, at least daily
        - Automatic scan when files are downloaded, opened or accessed from a network folder
        - Automatic scan of visited web pages
        - Blacklisting of malicious/suspicious websites
    - Application whitelisting
    - Application sandboxing for code of unknown origin

Patch Management

Ensure devices/software are not vulnerable to known security issues for which fixes are available.

- Known vulnerabilities are likely to be exploited soon by attackers
- Vendors release patches for product they still support
    - As soon as new vulnerabilities are discovered
    - Periodically

- Requirements
    - Keep all software updated
    - Keep all software licensed and supported
    - Remove any unnecessary software

Advanced Cyber Defenses

Data Protection

Basically, understand the importance of data. Who would want it? What can they do with it?

- Encryption
- Fragmentation, so that attackers would need to access all fragments
- Sanitize, in order to remove PII information
- Backup periodically

Segregation of Duties

Use more than one person to execute a critical task. “If a task requires N processes, then N processes must be compromised to execute the task”.

- Banking: a sensitive order has to be authorized by at least 2 people from 2 different services

Network fragmentation and monitoring

- **Fragmentation** → divide the network into
    - 1. Business processes
    - 2. Necessary exposure
    - 3. Risk levels

  For example, for a corporation, we could split its network to 1. offices, which need access to the internet, 2. front-end, which needs to be accessed from the internet, and 3. backend, which is only accessed by privileged users. Meanwhile, all levels should be monitored by a firewall.

- **Monitoring** → observe all traffic from/to the network
    - For example, when someone scans the whole network; is it a administrator or an intruder? We can use machine learning techniques to do that.

Honeypots

They are basically sandboxed machines that deliberately lure an attacker, in order to safely analyse a new malware and gather intelligence about the methods of an attack.

Pentesting

It is one of the most successful techniques to check the security of a network. Can identify how an attacker would breach the system. Usually security companies are hired for that.

Standards

Also, depending on the relevant business sector, there are many standards that have been released, such as standards for credit cards, health-insurance and more.

APTs

Definition

APT stands for Advanced Persistent Threats

- Advanced: usually sophisticated attacks, using zero day vulnerabilities sometimes
- Persistent: long-term attacks, using stealthy techniques to remain to the target machine till the mission is accomplished
- Threat: malicious nature obviously

Goals

APTs are organized, well-funded groups with great technical skills who usually aim at:

1. stealing information from companies
2. compromise business network
3. gather intelligence
4. damage organization
5. exfiltrate data

- One good example is the Carbanak “gang” which was an APT aiming at financial institution. The operation was running for 2 years approx. (making it more persistent than advanced) and it collectively stole around 1 Billion!

Post Exploitation

APTs usually have a **post exploitation** phase since, they do not stop until they achieve their goal.
Now **post exploitation** is defined by four characteristics:

1. *Persistence* → once you establish a stable access to a network, you need to keep that connection and gain persistence over the infected machine. There are a couple of ways you can do that. For example in Windows OS, you can take advantage of:
    a. auto start features
    b. hijack DLLs or executables
    c. changes to Master Boot record or BIOS

2. *C&C Communication* → then you need to establish a remote connection with a command and control server, in order to be able to control the machine with remote commands. There are two main models of C&C communication, using the C&C hub

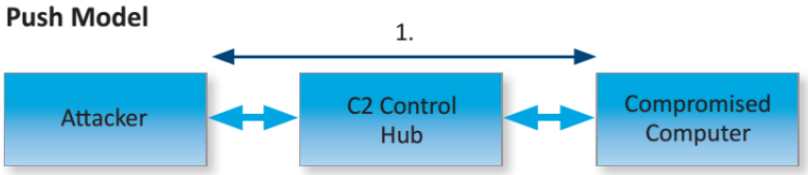

In the **push model**, the attacker sends commands and receives results directly

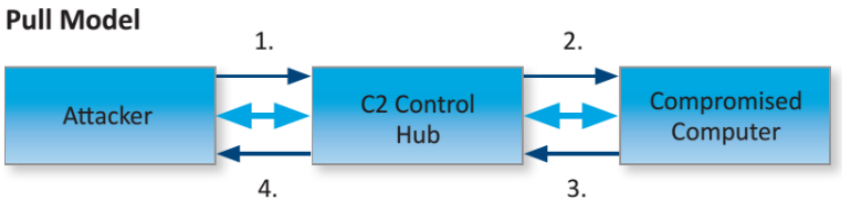

In the **pull model**, the attacked can leave commands at the hub, which will get retrieved periodically by the compromised computer and executed.

3. *Lateral Spread* → searching the internal network and gain access to other machines as well. This can be done by network browsing, credentials searching, analysis of the already infected machine.
4. *Data exfiltration* → in case of data breaches, you would want to siphon data to remote servers. You can use staging servers to gather information and apply transformations like aggregation, compression etc. However there is a trade off between **speed/risk**, since the faster you gather data, the higher the chance of detention

Social Engineering

Definition

In the cyber security context, social engineering is the act of psychologically manipulating people into performing some action or divulging specific information.

Techniques

There are many techniques used for Social Engineering.

Information Gathering

1. Information on the web (e.g. website of the company)
    a. email addresses
    b. phone numbers

    c. open job applications
    d. executives and employees
    e. social network mining
2. Dumpster diving: Sometimes many employees instead of using a shredder for confidential information, they simply throw it in the trash; therefore someone may find credentials, email addresses and more
3. Shoulder surfing: simply looking above the shoulder of someone while they are typing credentials on their computer

Interaction with the Target

1. Phishing: sending emails with malicious intent, appearing to be from reputable sources with the goal of influencing or getting information, e.g. government, financial institutions, tech support, high level management and so on.
2. Vishing & smishing: same as phishing but for voice calls and text messages; attacker may use caller id spoofing tools
3. Physical Interaction: attackers shows up in person, pretending to be from tech support, willing to fix broken facilities and so on.

Tailgating

Accessing a secure building without any card or biometrics, just by simply waiting for authorized personnel to enter and follow them. They are likely to hold the door for you, either by politeness, or because you are showing a fake badge, or because they are your partners.

Baiting

Intentionally leaving removable media in places where everyone can pick them up. Imagine it as a trojan horse.

Mitigations

I’m too lazy to write about the mitigations so here is a nice copy-pasta from the slides

- Information Gathering on the web
  - Be aware of her own social presence, in terms of available information, and how these information can be used to derive confidential/secret information
  - Revise online personal information
- Dumpster Diving
  - Use shredder to get rid off of any potentially sensitive paper document
  - Do not leave written notes or post-it in the office
- Shoulder Surfing
  - Keep an eye on who is around you
  - Never leave your laptop unattended
  - Shield your laptop with your body
- Phishing
  - Take a look at the sender's email address – If it looks suspicious, don't open the email.
  - Look before you click - Hover your mouse over any hyperlinks found in the email and if the address looks weird, don't click on it.
  - Check for spelling mistakes - Legitimate messages usually do not have major spelling mistakes or poor grammar.
  - Who is the email addressed to - Is the email addressed to a vague customer or is it addressed to you personally. Legitimate businesses generally give personal greetings.
  - Don't give up personal information – Legitimate companies will never ask for personal information via email.
  - Be wary of demanding language - Invoking a sense of urgency or fear is a common phishing tactic.
  - Look at the email signature – If there is a lack of contact details in an email signature, it could be a phishing email
  - Don't click on attachments - Including malicious attachments that contain viruses and malware is a common phishing tactic. Don't open any email attachments you weren't expecting.
  - Don't believe everything you see – If it's too good to be true, it probably is not true!
- Vishing & Smishing & Physical impersonation
  - Check for spelling/pronunciation/visual mistakes
  - Don't give up personal information
  - Be wary of demanding language
  - Don't believe everything you read/hear/see

GCHQ Academic Centre of Excellence EPSRC 21 cybersecurity southampton

Cyber Warfare and Hacktivism

Cyber Warfare

Definition

Cyber Warfare is defined by a systematic, targeted series of cyber attacks, with clear intent of destroying or disrupting key facilities of a country. The battlefield includes the cyberspace:

1. greater efficiency → better services but increased vulnerability
2. network convergence → everything is connected to a common network
3. channel consolidation → concentration of data in a few providers
4. networked forces → the internet has promoted military innovation

It has the same objectives as conventional war:

1. espionage
2. sabotage
3. propaganda

Example

An example of some targeted attacks happened a couple of years ago, in 2007 against Estonia. Apparently some day in April, a reallocation of a monument in favour of the Soviet Union happened, and the next day a series of disruptive cyber attacks started and destroyed some major country facilities

1. DDoS attacks
2. ministry websites shut down
3. prime minister party's website defaced
4. botnets begun attacking private sites and servers
5. banks shut down

6. national emergency toll number 112 disabled

Estonia blamed the Kremlin, however Russia denied this and attribution was never given. Then Estonia asked for intervention from the NATO, but NATO refused, since no **physical damage** or **destruction** had occurred.

Cyberwar vs Conventional War

The impact of the original attack is not enough to judge whether it should be considered as "war". We should also weigh in the consequences it brings afterwards.

Based on international law, the following are not acts of war and DO NOT justify the use of force as a response

1. propaganda
2. harassment
3. hacktivism
4. crime

Whereas, the following, even though they might violate the domestic law of the victim country, are still not considered as acts of war by the international law.

1. intelligence collection
2. cyber reconnaissance

At the end, the only way to determine whether an attack is an act of war or not comes down to the question → "Is it of your interest to declare it so?"

Weapons

- We can draw some parallelisms when it comes to weapons used in conventional war and cyber war. In conventional war, a missile has:
    - a **delivery vehicle** (rocket engine)
    - a **navigation system** (that tells it how to reach the target)
    - the actual **payload**, that harms the victim
- Something similar happens to cyber weapons. However, cyberwar seems to have some advantages over conventional war

Advantages of cyberwar

Cost effectiveness

- no need for expensive equipment or large number of troops and weapons
- everyone with a computer and access to internet can engage
- tools for attack are free and publicly accessible

Anonymity

- hide behind false IP addresses
- impossible to trace back to the attacker

Attribution

- it is impossible to place attribution to someone, since they can deny and claim their own machine got hacked and used as part of a botnet

- blaming the wrong actor is an act of war

Others

- attack at the speed of light
- no physical casualties
- aims at disruption of opponent
- exploitable vulnerabilities increase as time progresses

Hacktivism

Hacktivists are *politically* motivated hackers, driven by the pursuit of *social change* and not looking after personal *profit*.

Hacker ethics

1. information should be free
2. authority is bad; decentralization is better
3. technology can be used for the good of humanity
4. hackers should be judged only on technical skills
5. everyone should have unlimited access to computers
6. hackers activities should be considered as art

Hacker Culture

1. conspiracy theorising
2. obsession with privacy and secrecy
3. membership fluidity
4. anarchist in nature
5. culture of humour and creativity

Hacktivism vs Cyberterrorism

1. both use technology as a tool
2. cyberterrorists use *violent* methods and aim at *destruction*
3. hacktivists do not use *violent* methods aim at *disruption*

Hacktivist Groups

Anonymous

1. created in 4chan in 2003
2. usually referred as “anons”
3. guy fawkes mask as disguise
4. started as pranks; has evolved into politically motivated organization
5. They support all that stuff above about freedom of speech, free distribution of information etc.

6. Members can join and leave whenever they want
7. No hierarchy; however there are some members with high organizational and technical skills who orchestrate attacks
8. relies on critical mass for DDoS attacks
9. community-based communications like message boards, file sharing etc
10. have launched a series of massive attacks over the years, the most notable of which: against church of scientology, operation to avenge julian assange, operation as revenge to pirate bay shutdown, operation against child pornography sites, against Israel for its actions in Gaza etc.

Wikileaks

Founded in 2006 in Iceland by Julian Assange. Its main goals are to make confidential information publicly available, when it concerns the general public, and provide a secure place for journalists and whistleblowers to enclose private archives. In 10+ years of operation, it has leaked more than 10 million documents It also has bulletproof hosting, with many servers around the world. It has leaked documents about politics, governance, economy, military and so on.

Security of Critical Infrastructures

Introduction

Critical Infrastructure of National Critical Infrastructure are all the elements, services, people, networks, property, information that allow a country to operate and upon which daily life depends on. Some examples are:

- Finance
- Military
- Government
- Electricity
- Water
- Communications
- Defense
- Health
- Transport

CI are managed by the so-called Industrial Control Systems (ICS), which sometimes they are hiding in plain sight, but monitor many processes of daily life that are often taken for granted.

The components of an ICS are:

1. SCADA : supervisory control and data acquisition system
2. RTU : remote terminal units

3. LTU : local terminal units
4. PLC : programmable logic controllers
5. HMI : human machine interface
6. IED : intelligent electronic devices

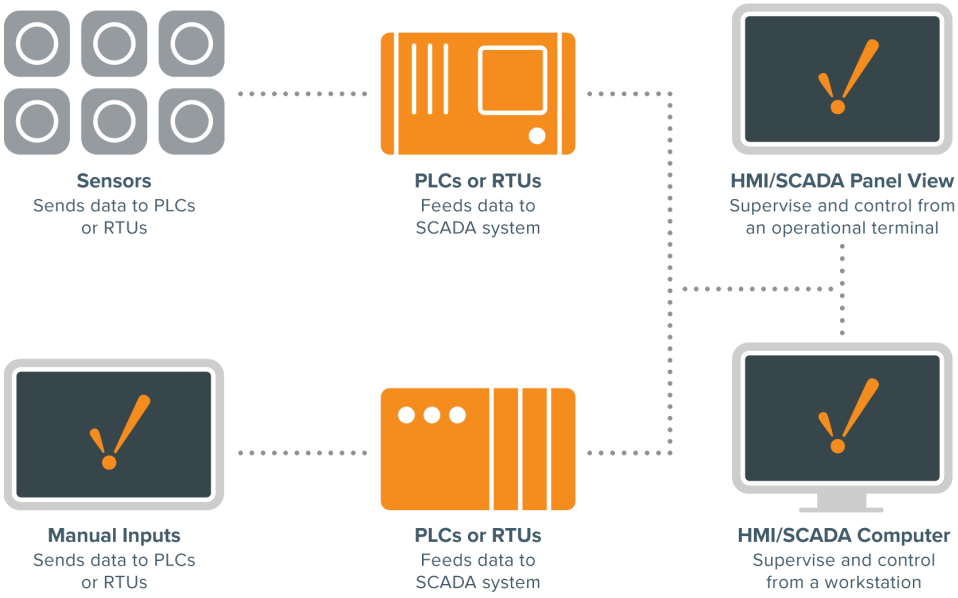

The terms SCADA and ICS are often used interchangeably

Security

ICS implement the concept of **security through obscurity.** They use proprietary and not well known software, interfaces and protocols. Apart from that they are not considered very secure:

1. vendors publish manuals online
2. ip leaks
3. some devices can be bought cheaply

There have been cases where SCADA has been proved insecure.

1. **Ohio blackout in 2003**: software failure of a SCADA system in a utility company in Ohio. Local plants tried to support the failed lines, however they soon became overloaded and failed as well. Then power lines in Michigan did the same things, resulting in their failure as well. Grids in Canada disconnected as well. Single point of failure caused domino effect!
2. **Stuxnet**: cyber attacks against iranian nuclear facilities, which aimed to disrupt Iran's nuclear program. They targeted centrifuges used for uranium enrichment. Highly sophisticated malware was used, with multiple zero day exploits. However the SCADA system did not have access to the Internet, so the attack must have originated by a USB stick or something. It got spread over the LAN and targeted Siemens S7 devices. Damage in million of USD.

3. **BlackEnergy**: power outage to a region in Ukraine. Three different electricity companies were targeted. Approximately, 225,000 people lost power for 1 to 6 hours. IT infrastructure component disabled, DDos on call center, many files got removed.

Cryptography

- A *hash function* h maps a piece of information to a fixed-length value x = h(P), which is called hash value or digest of P. It ensures integrity of x, meaning that if someone knows x, they cannot reconstruct the information P. (SHA-3,SHA-256)

Types of encryption

1. **Symmetric** Encryption → the same key is used for encrypting and decrypting messages. It ensures confidentiality of x.

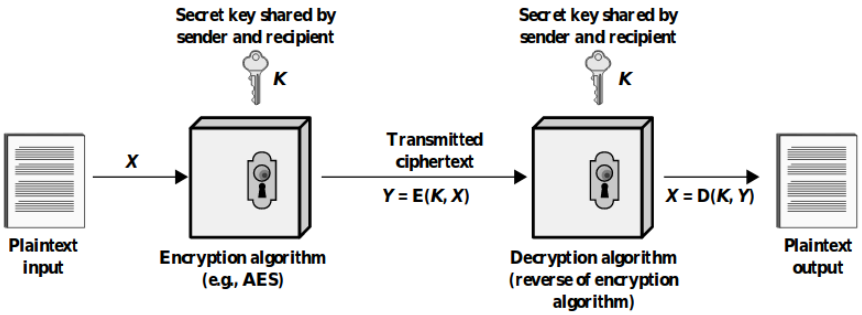

2. **Public Key** Encryption → sender encrypts the message with the public key of the recipient, which later decrypts it with their private key. (RSA, DSA)

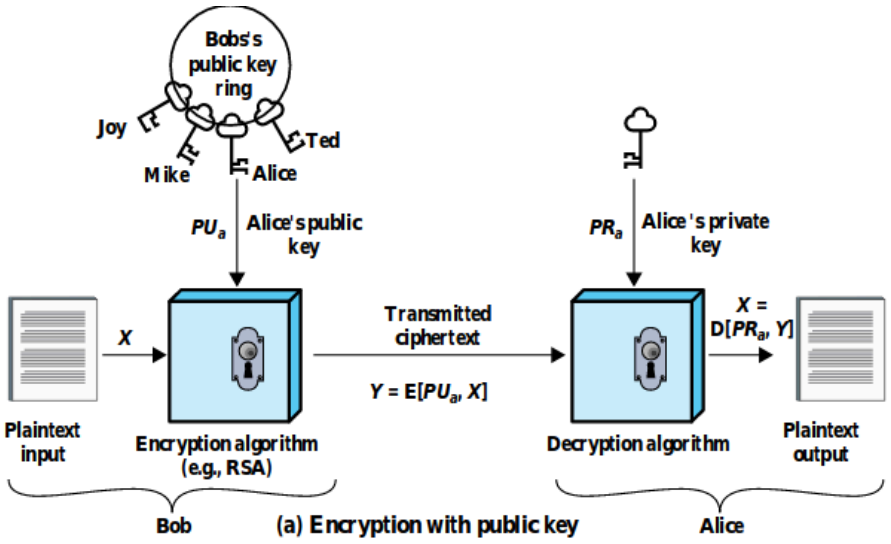

Digital Signature

Digital signatures are something like electronic signatures that help at verifying the validity of a message x. They ensure **integrity** of x, **source authenticatication** and **non-repudiation**. Below, Bob signs a message, by generating a digital signature with his **private** key, and then Alive verifies that signature, using Bob's **public** key.

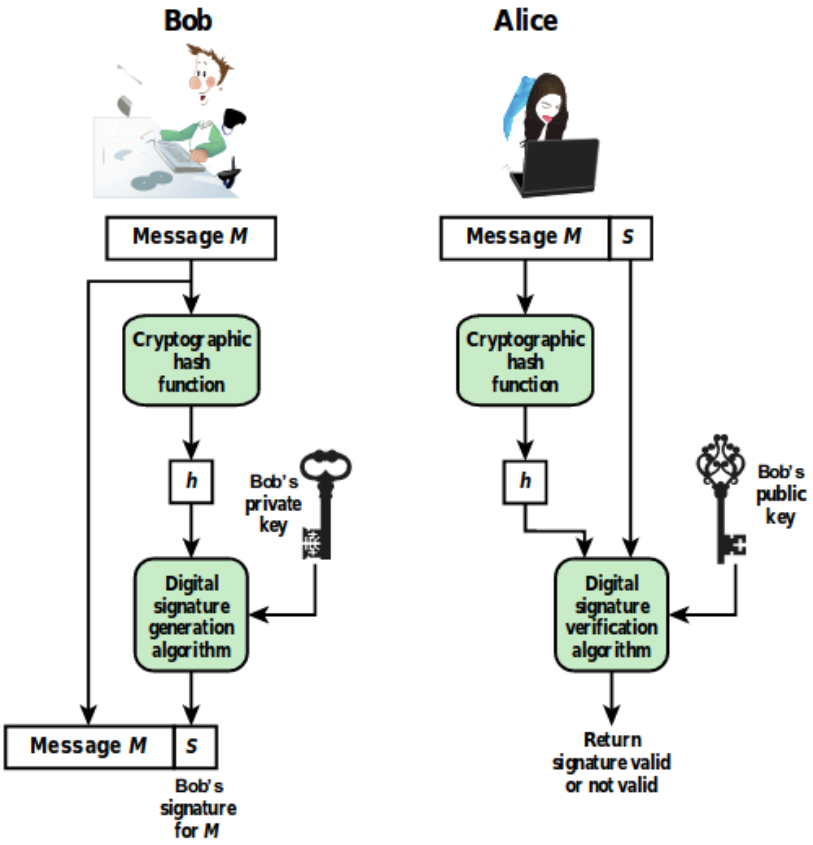

(a) Bob signs a message (b) Alice verifies the signature

However, there is a problem arising with symmetric key cryptography. Since, the recipients use the same private (secret) key to ensure secure communication over a channel, how did they exchange that key in what at first was an insecure channel? There comes the ***Diffie-Hellman key exchange protocol***.

Diffie-Hellman key exchange protocol

1. allows two users to exchange secret key, which can be later used for symmetric encryption
2. limited to the exchange of secret values
3. its effectiveness depends on the difficulty of computing discrete logarithms

Color example

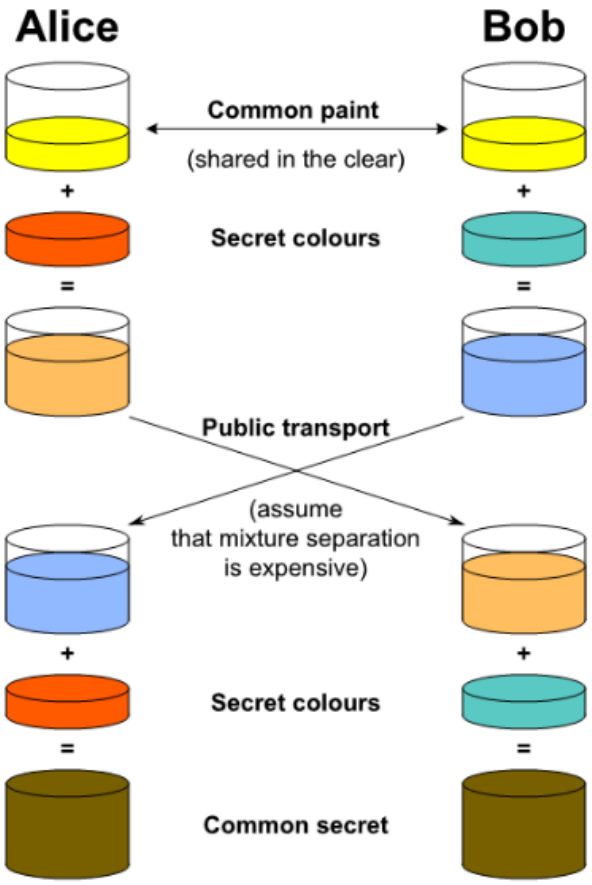

1. generate public paint
2. generate secret color
3. mix public paint with secret color and share the result publicly
4. mix received result with private color
5. cha cha cha real smooth we got the same secret color!

This can happen because this operation is ***COMMUTATIVE***. To produce let's say orange, it does not matter whether you mix red with yellow or yellow with red first. The order of the operations does not matter, the end result will be the same.

Example from slides

1. $q = 353$ and a primitive root of 353 is $\alpha = 3$
2. Alice selects $X_A = 97$ (private key)
3. Bob selects $X_B = 233$ (private key)
4. A computes $Y_A = 3^{97} \bmod 353 = 40$ (public key)
5. B computes $Y_B = 3^{233} \bmod 353 = 248$ (public key)
6. A computes $K = (Y_B)^{XA} \bmod 353 = 248^{97} \bmod 353 = 160$
7. A computes $K = (Y_A)^{XB} \bmod 353 = 40^{233} \bmod 353 = 160$

Basically, when given a public key q and a primitive root of that let's say a.

1. calculate random public numbers for alice and bob so that Xa and Xb < q
2. calculate public key Ya = (a ^ Xa) mod q and Yb = (a^ Xb) mod q
3. those keys are then being exchanged again in public
4. so secret key is K = (Yb ^ Xa) mod q and K = (Ya ^ Xb) mod q

However, **man in the middle attacks** can still happen, by having someone who intercepts both communications and having established a secret key with both parties to makes them think they communicate directly with each other. Therefore, we need a way so that:

1. the recipient knows with certainty the public key of the sender in order to verify their digital signature
2. the sender knows with certainty the public key of the recipient, to send the message

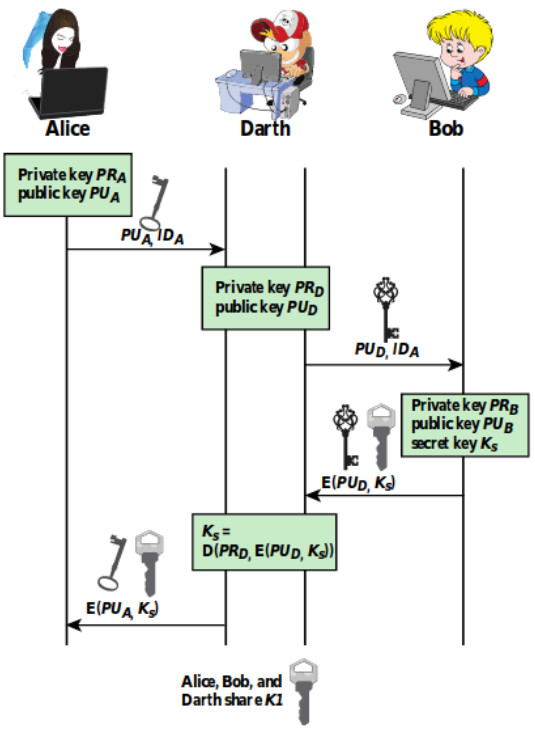

Digital certificates

- Binds an identity/company to their public key.
- Standard format X.509

They have mandatory fields like

- version
- serial number
- signature
- issuer
- validity
- subject
- public key

… and optional ones like:

- issuer unique identifier
- subject unique identifier
- extensions
- key usage

PKI: Public Key Infrastructure is the set of hardware, software, people and policies that together with the technology of asymmetric encryption facilitate the VERIFIABLE association of a public key with that owner's private key.

PKI Key players

1. **CA** : Certification authorities are trusted third parties which are responsible for issuing, revoking and distributing digital certificates. Companies like that are Verisign and Comodo. They sign the issued certificates with their private key so it is important of keeping the private key secret.
2. **RA** : Registration authorities work for the CA, but do not directly issue certificates. However, they verify the contents of a certificate before its issuance by the CA. They are known to the CA by their name and public key.
3. **PKI Repositories**
4. **PKI Users**

Certificates often can be **revoked** due to:

- compromise of private key
- human resources reasons
- expiration
- company changes name, reallocates etc

So, in that case, the revoked certificates gets published in the PKI repository in the CRL (Certificate Revocation List) by the CA.

Ok but how are certificates being **used**? Suppose that someone wants to verify a digital signature.

- First, we will fetch the certificate of the sender
- Then we will fetch the CRL
- We will check the certificate against the CRL
- Check signature using certificate if valid

However there have been attacks to PKI

1. **Comodo** case : someone compromised RA certificates gaining access to PKI and issuing 8 certificates for domains like www.google .com etc. The certificates were immediately revoked, however the attacker might have used them to create fake web sites and gather login credentials of users. Domain owners were notified about the attack. However, Comodo is still in business!
2. **DigiNotar** case: internal network of DigiNotar got breached and soon the attacked got access to CA servers, starting slowly to issue rogue certificates. At the end of the attack, more than 500 certificates had been issued along with a rogue certificate for google.com which allowed the attacker to conduct man in the middle attack and gather login credentials of more than 300,000 Iranian's gmail accounts. DigiNotar revoked the certificates and then it went bankrupt.

Network Authentication

Kerberos

Kerberos is an authentication protocol, designed in the 80's in MIT and not used anymore. It is based on the idea of centralized authentication server and relies on symmetric encryption. The goals of it, is that the user password should never travel over the network and never stored in the client's machine. Ok, so to do that it uses the so called Key Distribution Center (KDC)

In a very high level overview, it works like this:

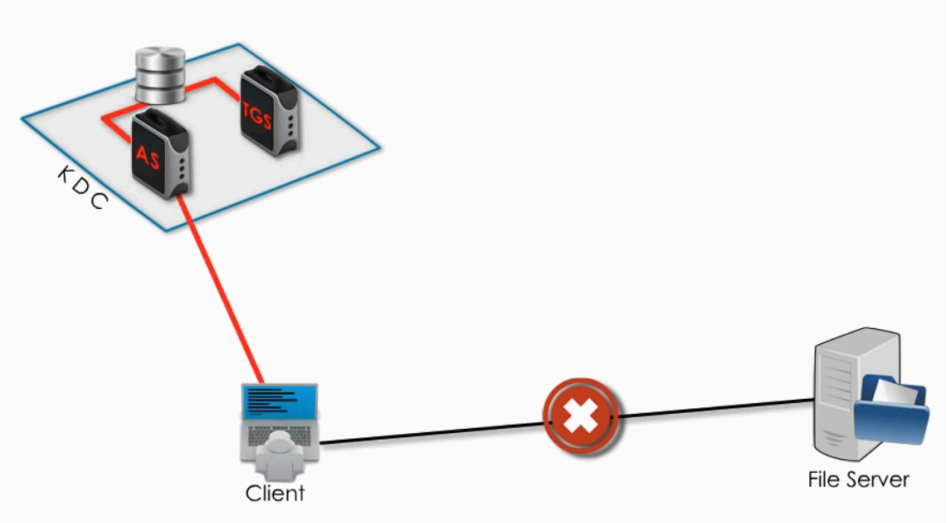

Suppose the client above wants to access the resources of the file server. They must be first authenticated from the KDC. THE KDC includes an Authentication Server and a Ticket Granting Server (AS and TGS) along with a database with all the passwords.

1. user sends request to AS encrypted with their private key
2. AS looks up this user's private key in the database and decrypts the message with that
3. AS issues a Ticket encrypted with a shared secret key between the AS and the TGS and sends it back to the client.
4. Client sends the Ticket to the TGS this time
5. TGS decrypts the Ticket by using the shared secret key between itself and the AS
6. TGS issues a Token encrypted with ANOTHER secret key, shared among the TGS and the file server and sends it back to the client
7. Finally, the client receives the Token and sends it to the file server, which later decrypts with the secret key between itself and the TGS and allows the client access to its resources. Oof

https://www.youtube.com/watch?v=_44CHD3Vx-0 for better explanation
For more technical explanation, visit slides

Disadvantages of Kerberos

1. Single point of failure - KDC is down? Noone can authenticate!
2. Requires synchronization of clocks between client and KDC server, since tickets have timestamps and expirations
3. Vulnerable to password guessing attacks
4. Assumes user's workstation is secure

SSL/TSL

TSL is the standard protocol for internet security that is used is nearly every web browser nowadays. Its primary goal is to provide data integrity and privacy between two communicating applications.

TLS consists of two protocols

1. **Handshake** protocol → use of public-key cryptography to establish common secret key between the two applications
2. **Record** protocol → use of that common secret key for further secure communication between client and server

During the handshake protocol, the communication between the client and the server will be like this:

1. Client sends **ClientHello** message, containing protocol version he is running and cryptographic algorithms he supports
2. Server sends **ServerHello** message, containing highest protocol version that both client and server support along with the cryptographic algorithm they are going to use.
3. Server sends **ServerKeyExchange** message, along with his public-key certificate, containing either his RSA or his Diffie-Hellman public key
4. Client sends **ClientKeyExchange** message, containing his secret key encrypted with the public key of the Server (if using RSA)

HeartBleeed

HeartBleed was a bug in OpenSSL, a common used implementation of some versions of SSL/TSL. The bug was present since 2012, but was discovered in 2014. Still a lot of servers are vulnerable. The exploitation of the bug allows us to get information about parts of the server memory, by sending some carefully crafted packets.

Privacy and Data Anonymization

Privacy

Solove's Privacy Taxonomy: Information are collected about a specific data subject, they are processed by the data holders and disseminated through illegal acts.

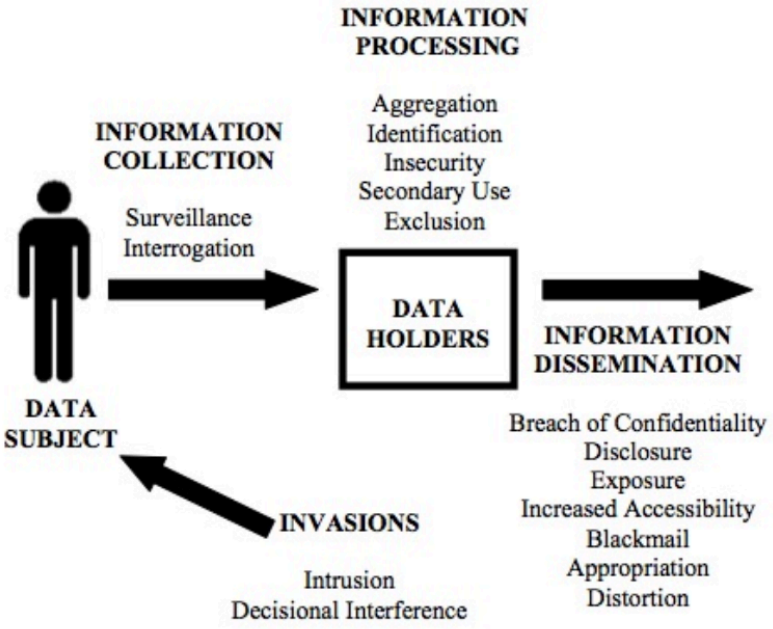

PETs : stands for Privacy Enhancing Technologies, they are basically methods someone can use to ensure better privacy.

- Privacy is often defined ambiguously, therefore we have 3 main different privacy researched models

Privacy as Confidentiality

~ The right to be left alone ~
Promotes things like

1. Data anonymization
2. Secure messaging
3. Anonymous communication

Example is CopyCat or Signal messaging

Privacy as Control

~ The right to decide about what information will be disclosed to others and under what circumstances ~
Promotes things like

1. Anonymous Credentials
2. Privacy Policy Languages
3. Purpose based access control

Privacy as Practice

~ The freedom from unreasonable constraints in the construction of someone's identity ~
Promotes things like
1. Privacy nudges
2. Feedback and awareness tools

Data Anonymization

Attributes classification

Database attributes are divided into 3 categories
1. **Explicit identifiers** → identify a user directly, like name, passport number etc
2. **Quasi identifiers** → date of birth, age, zip code, phone number
3. **Sensitive attributes** → records that we assume the subject would like to hide, like salary or disease

Now, in order to protect explicit identifiers, there are two ways.
1. **Tokenization** : generates unique token for the input data
2. **Substitution** : substitutes an attribute value with that token or another attribute

Techniques

However, protecting only the explicit identifiers is not enough, therefore we have four more techniques to ensure further data protection.

1. k - anonymization
2. l - diversity
3. t - closeness
4. differential privacy

k-anonymization

k-anonymization is based on the idea that each record has to be indistinguishable from k-1 other records in the database with respect to the quasi identifiers. Each class of equivalence has to contain at least k records which have the same values as the quasi identifiers.

There are two ways to implement k-anonymity:
1. **Generalization** → dividing the data into broader categories they fit in, for example instead of having age=19 we could have age <= 20.
2. **Suppression** → when there is too much generalization that results into loss of information

However, despite its advantages k-anonymity is susceptible to 2 types of attacks

1. Homogeneity → when the records in an equivalence class are identical, then the attacker can easily trace back the individual
2. Background knowledge → if the attacker already has some background knowledge about the person, they can associate them with an equivalence class

l-diversity

l-diversity comes as an extension to k-anonymity to ensure that there is enough variation

- **Distinct l-diversity**: each equivalence class must have at least l "well-represented" values
- **Entropy l-diversity**: this is not enough, the values need to be distributed evenly enough

However, l-diversity still has its limitations:

1. Does not consider overall distribution of sensitive values (take HIV+ HIV- for example)
2. Does not consider semantics of sensitive values

t-closeness

This is an easy one; distribution of sensitive data in each quasi identifier equivalence class should be "close" to the distribution in the overall database.

Restriction to aggregate queries
Another technique we could use is allowing the execution of specific queries, that do not disclose any PII, like ones that extract purely statistical data. However, even if that case, there are possible attacks. Imagine if we had the average weight for the existing records. And then we add a new record and perform the same query. Now that the average weight would have been slightly modified we could learn information about the last entry.

differential privacy

The intuition behind differential privacy is that the participation of one person does not change the outcome in a statistical database. For that purpose, differential private algorithms are used to ensure that an outside observer cannot tell whether a person is included in a database or not.

User Authentication Part 1

User Authentication is a fundamental building block of security
It consists of two steps:

1. Identification: present an identifier to the authentication system
2. Verification: verify the identity of the entity which presented the identifier

Three possible approaches

1. smth the user is
2. smth the user has
3. smth the user knows

Password based authentication

- widely used user authentication method
- user presents username and password requesting access to a resource
- system compares password with password file

Password overloading problem → users share same passwords across multiple accounts. Therefore, if someone gets access to one of their accounts, they can use same password to gain access to multiple. In average, users use 4 passwords for 22 services on the web.

Passwords can be cracked. One of the most common ways are brute force attacks, which is basically trying every possible combination. If a password uses A letters and has length n, then there are at most |A|^n tries to crack it.

Size matters! The longer the password, the more difficult to crack. A 7 character password can be cracked in milliseconds, whereas a 12 character one might require 2 centuries.

Password strength can be measured in two ways

1. normally computed as said before |A| ^ n.
2. another measure is entropy. $\mathbf{Log_2}\ |A|^n = n\ \mathbf{Log_2}\ |A| = n\ \mathbf{Log}\ |A|/\text{Log } 2$
   If the entropy of a password is b, then that means 2^b more attempts are required.

zxcvbn is a tool that can match a password against all possible patterns

- dates
- dictionaries of common words
- keyboard patterns
- repeated characters

It also calculates the entropy for each matched pattern
password entropy is the sum of the entropies of all its constituent patterns

Online dictionary attacks are also pretty cool; they try passwords associated with user, try words in a dictionary or popular passwords

Countermeasures

- set big enough password length
- change password periodically
- avoid obvious passwords
- avoid machine generated passwords

Other countermeasures

- lockout after many unsuccessful login attempts
- throttling; delays when trying to login after many tries
- protective monitoring; detect unusual activity
- password blacklisting; check if pwd in list of common words

Offline password attacks

- attacker gains access to password file, gains hashed password
- tries to crack it by using dictionary of commonly used passwords
- or uses rainbow tables

Countermeasures

- password salting ; append random number, salt
- password file access control
- keep hashed passwords separated from User ids

Many times attacker can craft websites that look like legitimate ones and use **phishing** to redirect the user to them, prompting them to enter their credentials. Also, they can **intercept** password exchanged through plain text over an insecure communication channel (HTTP).

Countermeasures

- ensure you use SSL/TSL from your browser, check certificate of the visited website

Other types of attacks include using a **keylogger**, **shoulder-surfing, dumpster diving** and the countermeasure is to be smart.

- there are many tools that can be used for offline password cracking, or extracting password hashes from local machines, include L0phtrack, pwdump, john the ripper, and online websites like crackstation.net, cain and abel and ophcrack
- there also tools for online password cracking, for example when you have an online service to crack like an ssh connection, like Hydra

There are 3 methods of password cracking

1. **brute force** → combination of random numbers and characters; very slow, crack can take days, weeks, years, you get the point. 100% successful
2. **dictionary** → uses a dictionary or wordlist to crack password, quickest attack method, rainbow tables can also be used

3. **hybrid** → combination of dictionary and brute force; it can use certain patterns to capture common user behaviours like replacing o's with 0's and so on. Faster than brute force, slower than dictionary.

Token based authentication

The user has to present a token to be authenticated.

Barcodes

- mainly developed to increase efficiency at grocery checkout
- first generation were just vertical lines of variable-width; used one dimensional encoding scheme
- second generation use two-dimensional patterns
- airline industry uses them in boarding passes, that are scanned before boarding
- the barcodes are encoded with an internal unique identifier, identifying the owner of the ticket, so that the airline could verify they purchased that ticket and they can provide photo identification
- however, apart from airports, barcodes are not usually used for authentication; mostly for convenience; Keep in mind, that since they are images, they can be easily duplicated

One Time Password devices

- generate a number unique token every couple of seconds
- hardware or software based
- time-based one time password
    - secret key and time of day
    - hashed functions
    - timestamps are synchronized with NTP

Magnetic Stripe Cards

- plastic cards with magnetic stripes which contain information about the card owner.
    - 1st track contains cardholder's name and account number
    - 2nd track contains expiration date, issuing bank, format of the track
- however, they are pretty vulnerable because they can be easily read by using a magnetic card reader, and reproduced by a magnetic card writer.

Smart cards

- smart card reader is required for that, which stores public and private keys of the user and participates in a challenge response protocol with the reader
    - user enters pin
    - computer sends a challenge B
    - smart card generates random value A, A||B and sign (A||B) with the private key

    - computer verifies

Electronic Passports

- RFID communications encrypted with private key
- however, private key is usually passport number, date of birth and expiration date
- so if someone has physical access to the passport or knows some stuff about the owner, they can easily reconstruct the key

Biometrics based authentication

Biometrics are usually measures that can uniquely identify a person based on his physiological or biological traits. Biometric systems use sensor scanners the read biometric information, which they compare with stored templates.

Requirements for biometric authentication

1. **universality** - everyone must have this trait
2. **distinctiveness** - each person must have noticeable differences in that trait
3. **permanence** - trait doesn't change over time
4. **collectability** - easy to be collected and determined

Candidates

- signature
- fingerprints
- iris scan
- voice recognition
- face recognition
- gait recognition
- maybe heart beats??

Limitations

1. accuracy of matching algorithm
2. easy forging of biometric traits
3. social acceptance

Multi-factor authentication

- combination of methods
    - password and sms
    - password and iris scan
    - smart card and fingerprint scan

User Authentication Part 2

Digital Identity

A **digital identity** is the digital representation of the information known about an individual:

1. name and surname
2. national insurance number
3. phone numbers
4. addresses
5. usernames and passwords …

A **digital identity management system** provides a centralized solution that manages user's digital identities and user's access to resources/services

It has 3 main players

1. **subject**: system entity upon which something *can be asserted*
2. **asserting party** or **identity provider**: system entity that *creates* assertions about the subject
3. **relying party** or **service provider**: system entity that *consumes* assertions about the subject

Single Sign On

According to Single Sign On, the user only has to authenticate once and then access all the resources provided by the service provider.

- Authentication is handled by the SSO service, which maintains the identify of the user
- When the user wants to authenticate again, the service does that for them

Federated Identity → a set of organizations, who have reached an agreement to establish a common shared identifier to refer to a subject. Basically means that if you can access the resources of one organization, you are also authenticated to access the ones of the other.

- Facilitates Single Sign on
- Reduces the cost of maintaining many different digital identities

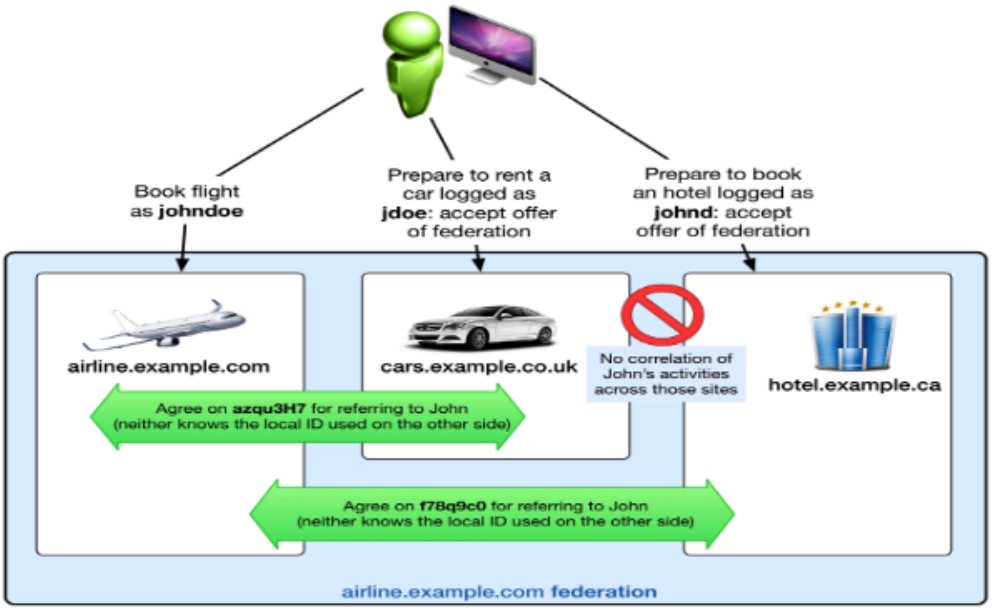

For example, here the green guy, by authenticating himself to the first website, he can also access the resources of the second and third one, without having to login again, supposing that he accepts the offer of federation that the airline has with the car renting and the hotel companies. Be careful though! The second company doesn't provide an offer of federation with the third.

Anyway, there are 3 main protocols to facilitate or implement Single Sign On. The first two are XML based and the last one is JSON based.

SAML

- SAML is an XML based protocol that facilitates SSO by providing a standard representation for **attribute assertions** and **authentication assertions**.
- SAML asserting party or IP verifies identity of the user and issues authentication assertion
- the user presents to the SP the authentication assertions without authenticating again

3 types of assertions

1. **authentication** statements: verify the identity of the user and the means to get access to the resources
2. **attribute** statements: additional attributes about the subject that define them (e.g. role, name, age etc)
3. **authorization** statements: permissions of the subject

Common elements

1. assertion ID
2. issuer and issuance timestamp
3. subject
4. conditions under which the assertion is valid

Bindings describe how SAML request/response **protocols** can be carried over underlying transport protocols. **Profiles** indicate how different SAML assertions, bindings and protocols can be combined to facilitate different use cases.

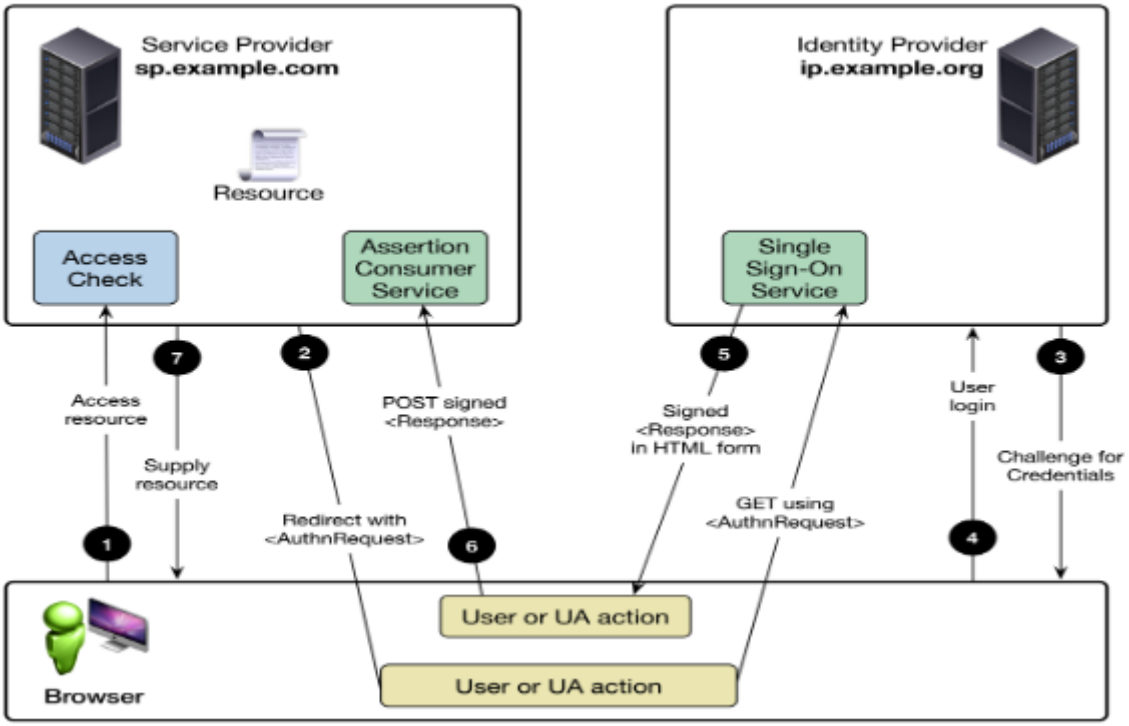

Shibboleth

Shibboleth is a protocol built on top of SAML, that is mainly used for universities. Basically it was created so that universities can share resources with each other, without having its members to login with different identities every time they want to access something. Its authorization grant flow goes like this:

1. user asks for access to Shibboleth protected resource
2. gets redirected to WRYF (where are you from?) which is the central system that manages the authorization to resources
3. user selects their university from the list, which is their identity provider
4. the identity provider authenticates the user
5. a **one-time** handle is generated for this user session and sent to the SP
6. the sp uses the handle to request attribute values for the user
7. if the attributes allow it, the user gets access

OpenID Connect

JSON based authorization protocol based on top of OAuth 2.0. It is widely used by big companies and for a range of applications like

- consumer apps

- social apps
- enterprise apps

OAuth (more about this later)

Very shortly, OAuth is a standard authorization protocol that allows third party applications to access protected resources hosted by a HTTP server. It has 4 key players

1. resource owner (you and me)
2. resource server (facebook)
3. authorization server (facebook)
4. client application (spotify)

So, normally the main OAuth grant flow works by sending a POST request to the authorization server in order to get access for the resource owner. The authorization server verifies the credentials sent in the POST request and if they are ok, they send back an **access token**, with which the client can access the resources in the resource server.

So, what OpenID connect does on top of that, is sending a slightly different POST request, defining extra information, like different **response_type** and **scope**, which have as a result an **access token AND a identity token** to be sent back.

So, what's an identity token?

- it basically asserts user identity
- specifies the identity provider
- may specify when the authentication happened
- has issue and expiration
- additional subject details
- digitally signed and encrypted
- encoded as a JSON WEB TOKEN, everything is packed in a simple JSON object

Access Control Part 1

Access control is a central element is cyber security. It manages the prevention of unauthorized access to a resource, or the use of it in an unauthorized manner.

AAA Systems

1. **Authentication** -- the user presents the identity they claim to be
2. **Authorization** -- verifies the identity is legitimate and the permissions of the user
3. **Audit** -- monitoring of user accesses to system resources

Access Control Models

4 main models of access control

1. **DAC** - *Discretionary* →permissions explicitly defined for each user
2. **RBAC** - *Role Based* → permissions defined for each role
3. **MAC** - *Mandatory* → depends on security labels of objects and security clearances of subjects
4. **ABAC** - *Attribute Based* → based on attributes of subjects and objects

DAC

- Access to data objects is permitted based on the identity of the user
- explicit access rules of who can read, write, execute a file etc
- by **discretionary** we mean that the user has the ability to pass on their privileges to other users

Access Matrix

objects

subjects

	bill.doc	edit.exe	fun.com
alice		execute	execute read
bob	read write	execute	execute read write
charlie	read		
dave		execute	

Access Control List

based on **object**

	bill.doc
bob	read write
charlie	read

	edit.exe
alice	execute
bob	execute
dave	execute

	fun.com
alice	execute read
bob	execute read write

Access Capability List

based on **subject**

	edit.exe	fun.com
Alice's capability	execute	execute read

	bill.doc	edit.exe	fun.com
Bob's capability	read write	execute	execute read write

	bill.doc
Charlie's capability	read

	edit.exe
Dave's capability	execute

Limitations of DAC

- difficult to manage for large organizations with many employees
- the set of subjects change frequently
- getting a list of permissions for each subject (capability list) is hard
- getting a list of permissions for each object (access control list) is also hard

RBAC

- Role based access control, instead of having permissions for each user, we have for each role
- easier to manage
- roles are assigned to permissions and users to roles, so users to permissions is done automatically

3 main families

1. RBAC 0 - users, roles, permissions, and sessions
2. RBAC 1 - RBAC 0 + role hierarchies
3. RBAC 2 - RBAC 0 + constraints
4. RBAC 3 - RBAC 1 + RBAC 2

RBAC 2 introduced **constraints**, which can be divided to

- Static Separation of Duties **SSD**: user cannot be assigned more than n roles
- Dynamic Separation of Duties **DSD**: user cannot be assigned more than n roles in a single session

- Mutually Exclusive Users
    - static: same user cannot have mutually exclusive roles
    - dynamic: same user cannot have mutually exclusive roles in a single session
- Mutually Exclusive Roles
    - static: mutually exclusive roles cannot have same permissions
    - dynamic: mutually exclusive roles can have same permissions, but cannot be activated at the same time by different users
- Mutually Exclusive Permissions
    - static: same role cannot be assigned to mutually exclusive permissions
    - dynamic: same role cannot be assigned to mutually exclusive permissions in a single session

Constraints can also **depend** on

- physical environment; place and time
- execution history
- context; business, emergency, health etc

RBAC advantages

- easier administration
- reduce employee downtime
- enhanced system security and integrity
- role hierarchies allow us to implement the concept of least privilege
- fewer relationships to manage from O(mn) to O(m+n)
- constraints allow separation of duty

In short about linux access control remember:

- chown: change user owner and group to a file e.g. chown user:group file
- chmod
- ls -l

Access Control Part 2

Sometimes, we need to enforce access control based on some attributes regarding the object, the subject, the environment and actions. In those cases, we use Attribute Based Access Control.

XACML

One common implementation of ABAC is the **XACML** eXtensible Access Control Markup Language, which is an XML based OASIS standard, that is based on a Request and Response scheme.

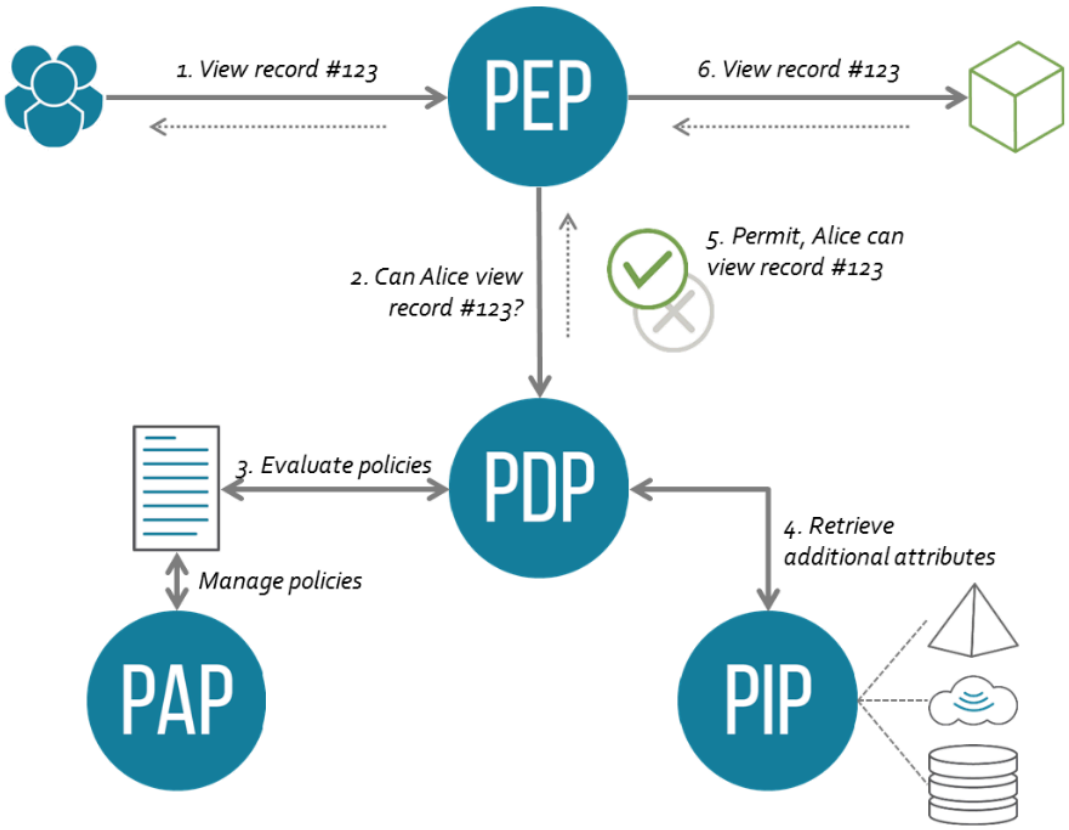

Actors & Grant flow

There are 4 main actors in the above access control grant flow:

1. Policy Enforcement Point → entity that is protecting the resource and performs access control by making decision requests and enforcing authorization decisions and executing obligations defined by the PDP
2. Policy Decision Point → entity that receives a request from the PEP, and examines it. It needs to retrieve applicable policies from the PAP and attributes regarding that policy from the PIP. After it has made the authorization decision, it returns the result to the PEP
3. Policy Administration Point → it is the one that actually creates the policies and stores them in the repository
4. Policy Information Point → it is the source of attribute values needed for the evaluation of a policy from the PDP

Key Components

<PolicySet>

- is the top element of a policy which is contains either other <PolicySet> elements or <Policy> elements.
- contains <Rule> element which provides the conditions which test the relevant attributes within a Policy
- contains <Target> element which associates a requested resource with an applicable policy
- *combining algorithms* to reconcile multiple outcomes of policies' evaluations into a single authorization decision

<Rule>

contains

- **<target>**: conditions to determine if a rule is applicable to a decision request
- **<effect>**: consequence if the evaluation of the rule is True
- **<condition>**: boolean that refines the applicability of a policy
- **<obligation>**: operations to be performed with an authorization decision

<Target>

contains:

- **<AnyOf>** : disjunction of <AllOf> elements
- **<AllOf>**: conjunction of <Match> elements
- **<Match>**: specify conditions against subjects, resources and actions

<Policy>

contains:

- **<Target>**, defines the applicability of a policy to a decision request
- **<Rule>**, expresses different access control rules
- **<ObligationExpression>** which is optional and specifies the actions to be done by the PEP after authorization finishes, e.g. send email to the owner of the resource
- *rule combining algorithms* specify how rules can be combined to make authorization decision

So, there are many *combining algorithms* to find final outcome between many policies' outcomes.

1. Deny-Overrides
    - deny decision has priority over permit
    - returns Permit if every decision is Permit
    - if all decisions are Indeterminate returns Indeterminate
    - otherwise returns NotApplicable

2. Permit-Overrides
    - permit decision has priority now
    - if all deny then returns deny
    - if all indeterminate then returns indeterminate
    - otherwise returns NotApplicable
3. First-Applicable
    - the result is the outcome of the first policy with Target = True
4. Only-One Applicable
    - apply only to PolicySet
    - if no policy is applicable then the result is NotApplicable
    - if more than one, the result is Indeterminate
    - if only one, then the result of that policy

<Request>

it encapsulates the request sent to the PDP

- Request is the top element
    - <Attributes> specify attributes of subject, object, action or environment
        - each attribute might have
        - <Attribute>
        - <AttributeID>
        - <AttributeValue>
    - <Category> specifies if the attributes are associates to subject, object, action or environment
    - <Content> can encapsulate the resource itself

<Response>

the response sent after the evaluation of the decision from the PDP back to the PEP

- Response is the top element
    - <Decision> specifies decision obviously
    - <Obligation> any further obligations the PEP might have to do (e.g. send email)

Access Control Part 3

OAuth

OAuth is an authentication protocol used to grant access to a third party application to a protected resource hosted on an HTTP server, with the permission of the resource owner

We have already discussed about the main actors of OAuth previously. In very short, they are:

- resource owner

- resource server
- authentication server
- client

OAuth has 3 main grant flows

1. Authorization code grant flow
    a. client application is a 3rd party application
    b. access requested on behalf of the resource owner
2. Resource owner password grant flow
    a. client application is a 1st party application
    b. access requested on behalf of the owner again
3. Client credential grant flow
    a. access is requested on behalf of the client application

Authorization code grant flow

The grant flow works like this:

1. first of all, our application needs to register with the authentication server.
2. server sends back client_id and client_secret to verify registration
3. later, we can do an authorization request, and we have to authenticate using our client id and password
4. as a result, an authorization code gets returned to us
5. we use that authorization code to do a POST request, containing that code, along with our client_id and our client_secret and redirection URL, which is where the browser will go to after it finishes with authorization
6. the server will give us back an access token, which we later use to communicate through this session and access the resources protected by the resource server

Resource owner password grant flow

This works like a simple login, it's much simpler since we don't have to register the application

1. you start by doing a simple login with username and password
2. the authentication server returns an access token
3. we can use that access token to get access to resources behind the resource server

Client credential grant flow

Sometimes when you want to create an application that interacts with already existing ones, you need some secret keys and access tokens. For example, if you want to make a twitter bot, Twitter will provide you with some access tokens to be able to communicate with it.

1. You make a request containing your client_id and client_secret requesting for an access token (again you don't have to register like the first grant)
2. Authentication server gives you the access token
3. you are ready to use it from inside your application

Blockchain part 1

Introduction

Blockchain is a **decentralized** ledger of transactions, fully **replicated** over a **trustless** peer-to-peer network.

Transactions represent events of interest, like a Bitcoin transaction

Block is basically a set or a block of transactions. Blocks are linked together like a **chain**, since each block stores the hash value of its previous; hence the word “blockchain”

Bitcoin is a **cryptocurrency**, a digital asset that uses cryptography to secure transactions and is not controlled by any **central authority** like a bank. It uses a form of blockchain to store its transaction history, which is verified by the network of nodes. All transactions are public.

Bitcoin transactions, referred as **txn** are essentially transfering bitcoins from the sender to the receiver. Each transaction is being **broadcasted** across the blockchain nodes, which need to reach a **consensus** about which transactions happened and in what order in order to verify the transaction.

Transactions

Here we see that Alice wants to send 5 bitcoins to Bob. Therefore, in order for that transaction to happen, it is being broadcasted across the network, and every locally stored ledger updates its transaction history.

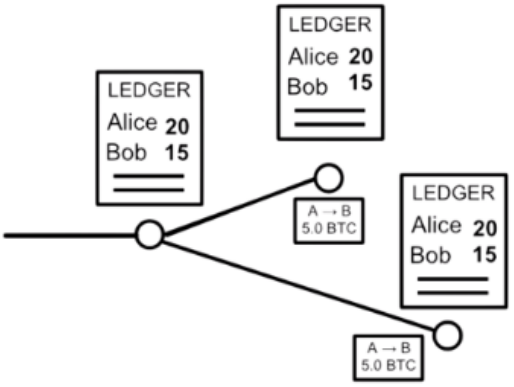

We use **digital signatures** to prove ownership of a transaction. According to that, each transaction is sent together with the signature of the sender, which is being encrypted by their private key. The receiver then uses the sender’s public key to decrypt the message.

Each destination has an address. Usually we have one address for every received payment, and that is to ensure the confidentiality of the user. If we used the same address, there would be a higher chance of the user being traced back and identified by a node with access to the ledger. Each address is associated with a **public/private key.** A wallet contains many addresses, along with the all the public/private keys associated with the user.

When we want to transfer some bitcoins, let's say we want to know whether the available amount comes from. We can look at the inputs of the previous transaction

- each transaction has a list of **inputs**
- each input points to an amount of bitcoins received through a previous transaction
    - this is referred to as **output**
- obviously we can use that output if it has not already been spent
    - *<u>UNSPENT TRANSACTION OUTPUT (UTXO)</u>*

- Therefore, we can only spent UTXO if its ownership can be proved. We can do that by having the private key corresponding to the address where that UTXO has been previously spent. In the example below, we see that the input of the txn #b21 are the transactions to the two "Alice" transactions. Therefore, txt #b21 inputs point to that. txn#445 gave Bob 2.0 bitcoins and txn#aa8 gave 3.0, therefore Bob has now 5.0 bitcoins.

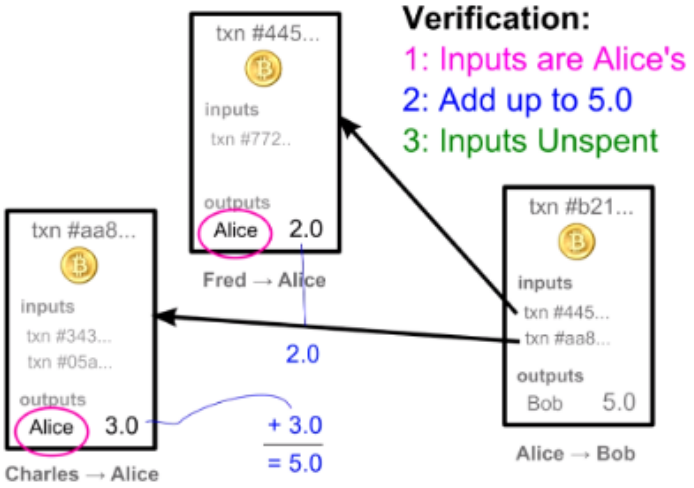

Double spending

Double spending is the problem of someone spending the same amount twice, while the first transaction has not been confirmed yet. This can be done by replicating the digital currency.

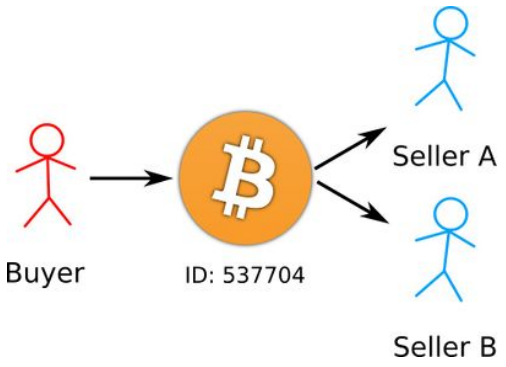

Decentralization

One of the key concepts of blockchain is decentralization. That means that transactions do not go through and therefore do not have to be confirmed from an intermediary like a bank. Reasons for that:

1. lack of trust
2. single point of failure
3. relatively high fees
4. risk of censorship or privacy

Proof of Work

As we said, transactions are encapsulated as a group in blocks.

- transactions in the same block are considered to happen at the same time
- each block has a reference to the hash of the previous one
- each time a new block is created it goes on top of the chain
- therefore if a block needs to be modified, it would require changing all the following blocks as well

New blocks are created by the so called **miners** through a process called **mining**, in exchange for bitcoins.

How does this work?

1. each miner chooses what transactions to include in a block from the pool of unconfirmed ones
2. chooses what the previous block is
3. uses their computational power to solve a resource-intensive puzzle to compute Proof of Work of that block; this is done for obvious reasons, because otherwise every node participating in the ledger would propose new blocks at no cost, resulting in overloading the network
4. whoever solves the puzzle first, will broadcast the new block to the network and add it to the local replica of the blockchain

It works like this

- new blocks contain
    - number of transactions
    - hash value of previous block
    - random number
- mining → find a number so that the hash of the block has at least a certain number of zeros as most significant digits. It is a process very difficult to compute but easy to check.
- the more the zeros the harder the mining
- difficult is periodically tuned to ensure new blocks are created in approx. 10 minutes

However, despite the goal of PoW to generate **one block at a time**, in some special occasions there could be that more than 1 blocks get generated simultaneously. In that case, we use **branching** where we take into consideration all of the blocks, and from now on, the branches are in a competition to see which one will get a successor block faster. Eventually one branch will become the longest and this is the one who will get selected. That is why it is recommended to wait for **6 blocks** to be generated before considering to confirm a transaction. And that's how the blockchain handles the **double-spending** problem without the use of a central authority to verify the transactions.

Since the probability of generating a new block, relies on the **hashpower** of the miner, a lot of miners gather together in **mining pools** to share their computational power, and split the profits among each other.

Performance

Parameters

1. Block size -- typically 1MB
2. Block interval -- time for a new block to propagate to all nodes of the network

Metrics

1. Throughput -- how many transactions per seconds normally 2.5 to 5
2. Latency -- how much time for a transaction to get confirmed, normally 8 to 10 mins

Relation of Parameters with Metrics

1. increase block size → increase throughput → however more time to propagate through network (increases block interval)
2. increase block interval → increase latency → however may result to frequent instability and reorganization of the blockchain

Blockchain part 2

Smart Contracts

A smart contract is a **computerized transaction protocol** that executes the terms of a contract.

To implement smart contracts you need 4 things:

1. **Integrity** → it lies in the accountability of contract enforcement
2. **Democratic Control** → each party of the contract must be able to control it equally
3. **Non-repudiation** → autonomous execution of a contract is non-repudiable. No involved party can raise disputes.
4. **Trust** → although smart contracts are executed through a trustless network, without the parties knowing each other in person, some trust must be built and preserved throughout the execution of the contract.

We can deploy smart contacts in a blockchain since all 4 of these properties can be satisfied that way.

1. stored in the blockchain for integrity
2. smart contracts are executed by all peers for democratic control
3. smart contracts as stored as transactions in the blockchain, so difficult to change for non-repudiation
4. use of PoW and consensus algorithms to build trust

Ethereum

Ethereum is a decentralized platform based on blockchain that executes smart contracts.

- uses PoW based blockchain, where contracts and invocations are stored as transactions
- EVM - ethereum virtual machine: every invocation of a smart contract is executed by every node in the blockchain
- it is also a cryptocurrency named Ether
- it offers two types of accounts instead of relying on UTXO
    - **External Owned Account (EOA)**: controlled by the user having the private key
    - **Contract**: has its own code, which autonomously controls the contract itself

- a user in the ethereum platform
    - can send money to another EOA account
    - request execution of a smart contract
        - updates the state of the contract

- However some certain problems arise when it comes to the execution of a smart contract. Can it end up in an infinite loop wasting computational power? Can anyone execute as many contracts as they want?

- Ethereum addresses those issues by introducing the concept of **gas units,** which is essentially the cost of executing a contact. So every time someone makes a transaction requesting for smart contract execution they specify
    - how much should each gas unit cost (in ether)
    - after how many gas units should the execution stop
- Therefore, the miner who executes the transaction will gain those gas units; therefore it makes sense for them to prioritise the transactions with the highest gas units as parameters. If gas limit is reached, execution is terminated.

Decentralized Applications

A decentralized application

- refers to an app whose backend is running on a decentralized peer to peer network
- no single node has control over the app
- its purpose is to allow multiple stakeholders to manage shared resources and assets according to a business logic defined by a smart contract.

Smart contracts

- are usually written in a programming language specially fit for the considered system
    - for ethereum usually solidity, serpent, and LLL
- every smart contract has handles when it comes to its blockchain deployment, installation and instantiation methods.
- their lifecycle is similar to the one of classical programs
- maintenance must take into account that deployed code is immutable
- life cycle phases
    - development
    - deployment
    - invocation
    - execution

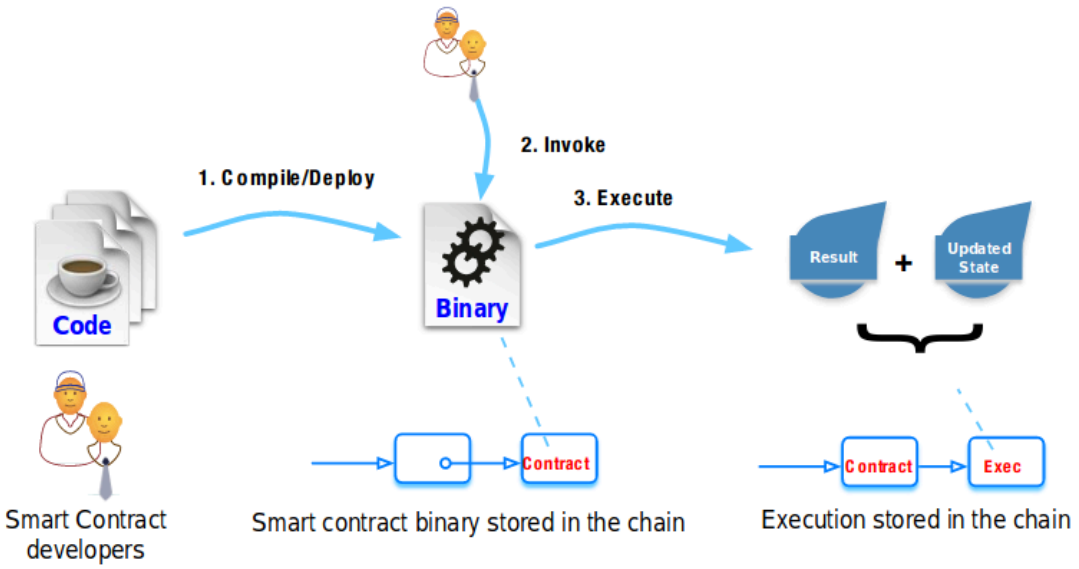

Permissioned Blockchain

Blockchains like Bitcoin's or Ethereum's are

1. public → everyone can access their content
2. permissionless → anyone can become a participating node without authentication

However, there are also

Private blockchains

- encrypted contents
- access control mechanisms to authorize reading

Permissioned blockchains

- miners need to authenticate and are a set of known nodes with a verifiable identity
- nodes can join the network following an authentication and authorization protocol
- this is the reason, there are usually much less nodes in permissioned blockchains
- each node is liable for its actions

- therefore any misconduct can be detected and traced back to the node

So, every node is verifiable and accountable for its actions now. That's the reason we don't anymore need **PoW** to facilitate trust. Trust is already given by the authentication and authorization of participating nodes.

Therefore the alternative we have here is called **Leader Rotation**:
- leader generates the new block
- nodes becomes leader in a round fashion
- if a leader behaves maliciously or crashes, we implement a **Byzantine Fault Tolerant Consensus** algorithm, therefore this system is vulnerable only if the attacker compromises ⅓ of the whole network or more.

There are some **advantages** that come with that solution:
- ensuring consistency without having to do expensive computations
- higher throughput → more transactions per seconds
- lower latency → less time to confirm each transaction

HyperLedger Fabric

Overview
Hyperledger Fabric is the most popular enterprise solution for Permissioned blockchains, on which smart contracts can be executed.
- open source
- more than 35 organizations and 200 developers
- highly modular and customizable
- use cases include finance, banking, healthcare, insurance, supply chain, human resources etc

Features
- supports smart contracts (chaincode) developed in general purpose programming languages like python, node.js and go
- it uses a permissioned blockchain as we already said meaning that
    - participants know each other
    - however, since they might be competitors, don't fully trust each other
    - still, there is some form of trust dictated by legal agreements and framework for handling disputes
- supports plugable consensus protocol
- however, doesn't support native cryptocurrency

Functionalities
1. identity management - membership identity authentication
2. privacy and confidentiality - private channels for transaction privacy between member of an organization
3. efficient processing - separation between transaction execution and transaction ordering and commitment

4. chaincode functionality - developing smart contracts to encapsulate some form of business logic